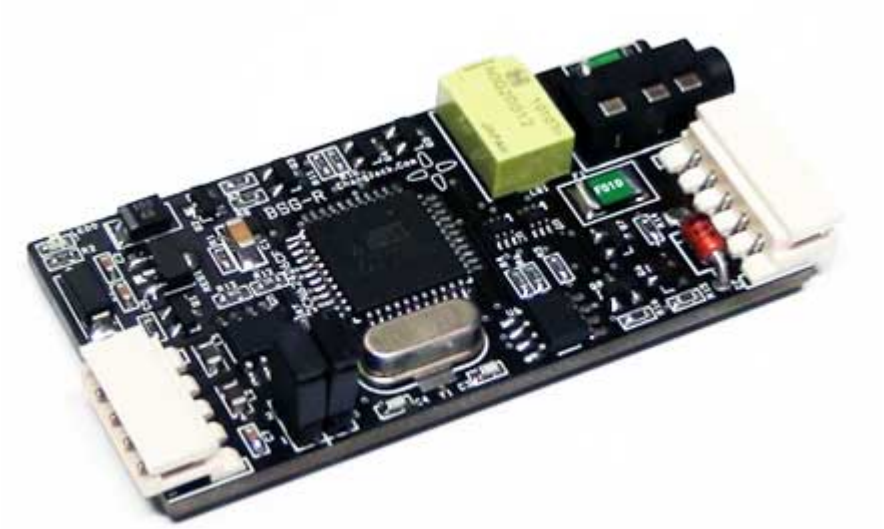

39.95 EUR
incl. 19% VAT, plus shipping

- For CarPC JoyCon EXD !

Support: Manual [EN] | Illustration

BSGr enables you to control both car pc and car radio with one steering wheel controls.

Feature of BSGr
- Generates resistive controller signal for car stereo remote control.
- Controls the resistive signal controlled car stereo(eg. Sony, Hyundai, KIA)
- Controlled by CarPC JoyCon Exd though J2P BUS
- Generates Phone/Mute signal
- Resistance range 0~100k ohm

*BMW IBUS, AUDI ‘99-’04(LIN), VW ‘99-’04(LIN) do not need BSGr.
*CarPC JoyCon Exd supports BSGd(Button Signal Generator Digital) for BMW IBUS, AUDI ‘99-’04(LIN), VW ‘99-’04(LIN) on the board.

User Guide
http://www.changjack.com/user_guide/bsgr/BSGr_UserGuide_eng.pdf

Why BSGr(Button Signal Generator Resistive)?

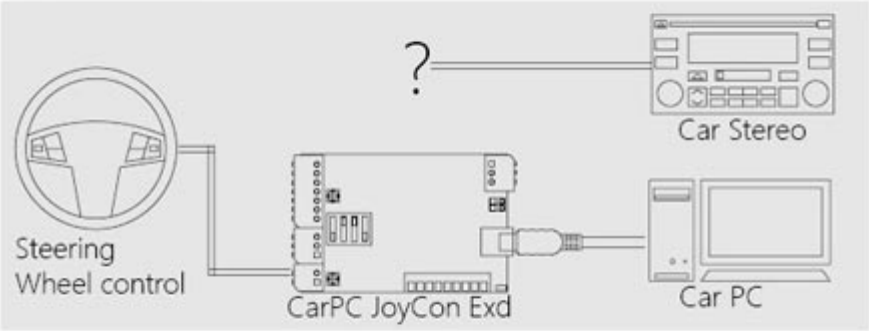

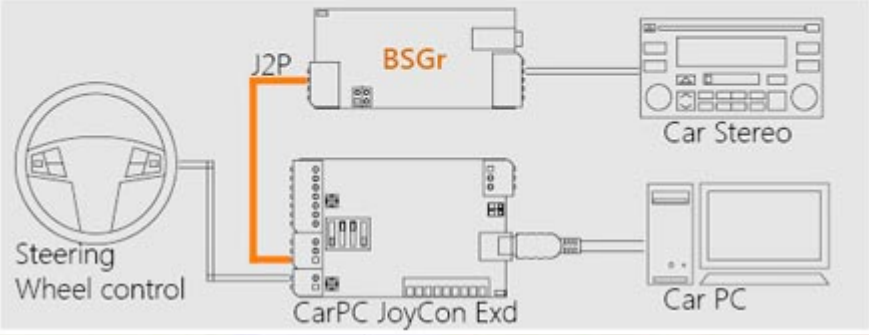

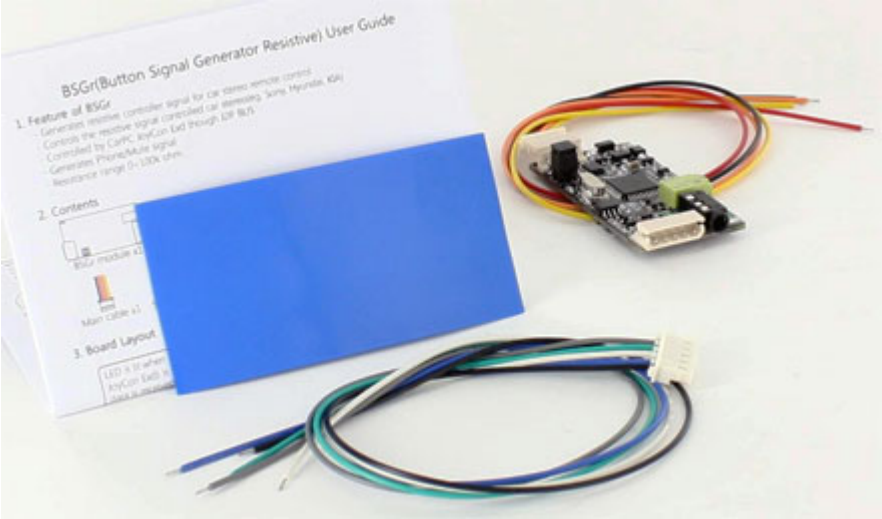

BSGr - Button Signal Generator Resistive (Car PC stalk adaptor)
[http://www.cartft.com/catalog/il/1739]

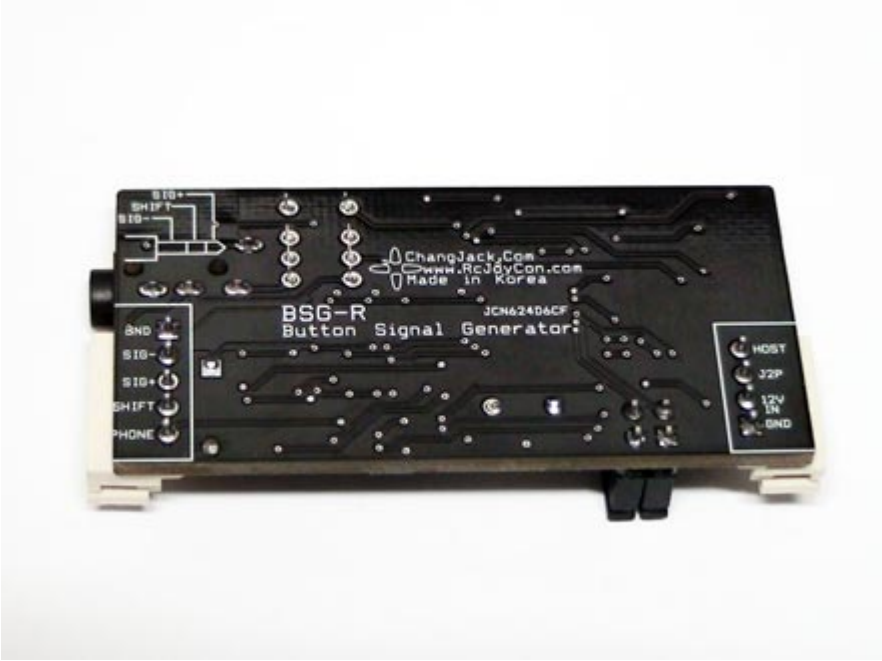
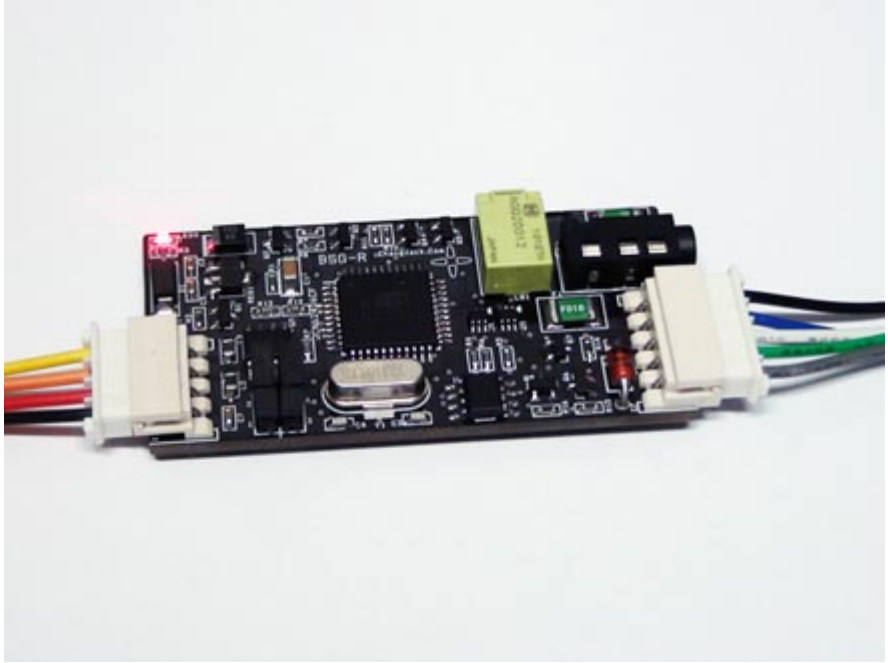
BSGr - Button Signal Generator Resistive (Car PC stalk adaptor)
[http://www.cartft.com/catalog/il/1739]